Product ID: MKR B1

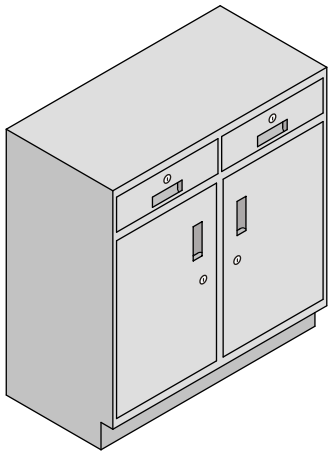

Teller Under Counter Unit

APPLICATION:

- large capacity teller's cupboard
- light security storage

SPECIFICATIONS:

- both drawers and both cupboard doors can be individually locked (locking is optional)
- drawers mounted on full extension pull out slides

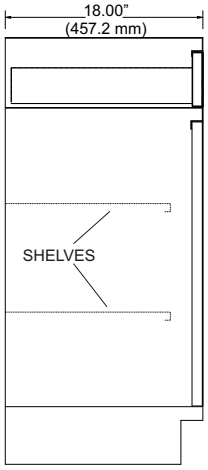

SECTION

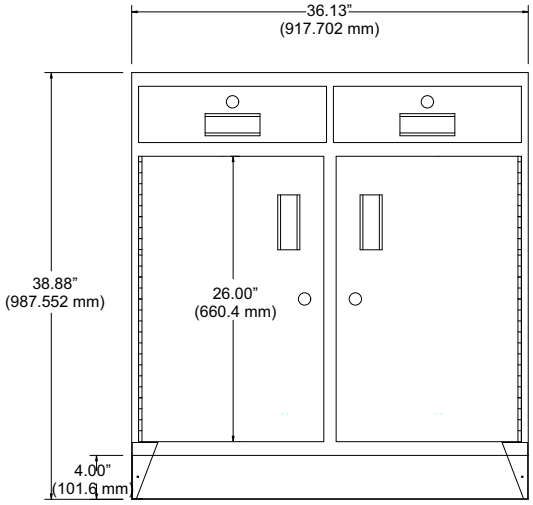

FRONT VIEW

- Security Equipment -

- Financial Institutions -